2023 RESURFACING OF VARIOUS TOWNSHIP ROADS
in
BALLVILLE & GREEN CREEK TOWNSHIPS
SANDUSKY COUNTY, OHIO

BIDS RECEIVED: March 21, 2023 AT 5:45 PM

ENGINEER'S ESTIMATE: $355,000.00

Plan holder Registration

To be eligible to bid on a project your company must be added to a plan holders list. If submitting a bid for a project, notify the County Engineer's Office to be placed on the plan holder list by providing company information and the project you will be bidding on. The plan holder registration form is on the project listing page located at the following website: www.sanduskycountyengineers.com

PLEASE PRINT CONTRACT DOCUMENTS ON LETTER SIZE PAPER

PROPOSAL,
CONTRACT DOCUMENTS,
and
SPECIFICATIONS
for the
2023 RESURFACING OF VARIOUS TOWNSHIP ROADS
in
BALLVILLE & GREEN CREEK TOWNSHIPS
SANDUSKY COUNTY, OHIO

APPROVED:

Mary A. Reser

Richard A. Geyer

BALLVILLE TOWNSHIP TRUSTEES

Robert Gelmy

Matthew D. Hofelich

GREEN CREEK TOWNSHIP TRUSTEES

PREPARED BY THE OFFICE OF

SANDUSKY COUNTY ENGINEER
CARLOS A. BAEZ SR., P.E., P.S.
2500 WEST STATE STREET
FREMONT, OHIO 43420
(419) 334-9731
www.sanduskycountyengineers.com

LETTING DATE March 21, 2023 @ 5:45 PM

BID OF_____

ADDRESS_____

CITY & STATE_____

ZIP CODE_____

PHONE_____

FAX_____

E-MAIL_____

TABLE OF CONTENTS

	Section	Page
INSTRUCTIONS TO BIDDERS	**A**	
Advertisement for Bids		A-1
Information for Bidders		A-2 to A-6
PROPOSAL	**B**	
Bid Sheets		B-1 to B-2
Bid Guaranty and Contract Bond		B-3 to B-4
Power of Attorney		B-5
Affidavit for Personal Property Tax		B-6
Finding for Recovery		B-7
CONTRACT	**C**	
Contract Agreement		C-1 to C-2
SPECIAL PROVISIONS	**D**	
Road Plans		D-1 to D-5
Supplemental Specifications		D-6 to D-10

ADVERTISEMENT FOR BIDDING
LEGAL NOTICE

Sealed Proposals will be received by the Boards of Ballville & Green Creek Township Trustees, 2220 Tiffin Road, Fremont, Ohio 43420 until 5:45 PM on March 21, 2023 for the furnishing of all labor, materials and equipment necessary to complete the project known as the 2023 Resurfacing of Various Township Roads in Ballville & Green Creek Townships at said time and place they will be publicly opened and read aloud.

Copies of the Plans, Specifications and the other Contract Documents may be examined and obtained at the Office of the Sandusky County Engineer, 2500 W. State St., Fremont, Ohio 43420 without charge, or at the following website www.sanduskycountyengineers.com.

In accordance with the Ohio Revised Code Section 307.87, this shall serve as notification that this notice is available on Sandusky County Engineer's internet website on the World Wide Web by logging onto www.sanduskycountyengineers.com and going to the Bid/Contracts link.

Proposals must be submitted on the forms furnished or downloaded from the above website and must contain the name of every person interested therein. The Proposal shall be accompanied by a Bid Guarantee and Contract Bond in the amount of 100% of the amount bid or a Certified or Cashier's Check or a Letter of Credit in an amount of at least 10% of the amount bid. The Boards reserve the right to reject any or all bids and to waive any formalities in any bid. Each bidder must submit evidence of its experience on projects of similar size and complexity.

All contractors and subcontractors involved with the project will, to the extent practicable use Ohio products, materials, services, and labor in the implementation of their product. Additionally, contractor compliance with the equal employment opportunity requirements of Ohio Administrative Code Chapter 123, Governor's Executive order of 1972, and Governor's Executive Order 84-9 shall be required.

By the Order of the Boards of Ballville & Green Creek Township Trustees

By _____, Ballville Township Fiscal Officer

By _____, Green Creek Township Fiscal Officer

Notice to Newspaper

Please publish Monday, March 6, 2023

SANDUSKY COUNTY ENGINEER'S
INFORMATION FOR BIDDERS
ON CONSTRUCTION PROJECTS

I DEFINITIONS

The words "County" or "Owner" or "Engineer" or "Director" or "Inspector" other words of similar connotation shall be understood to mean the Ballville & Green Creek Township Trustees in Sandusky County, Ohio acting through its properly authorized agents.
The words “Bidder” or “Contractor” shall mean the person or firm proposing to contract with the Owner to provide labor and/or materials in a construction project.
Wherever the words "directed", "required", "permitted", "designated", "approved", "satisfactory", "acceptable" or similar words are used, they shall be understood to refer to the exercise of the authority or judgment vested in the Engineer.

II SPECIFICATIONS

All work shall be performed in accordance with, and all materials shall comply with the requirements of applicable sections of the 2023 Edition of the Construction and Material Specifications of the Department of Transportation of the State of Ohio, and with the contract drawings and documents. Interpretation of Specifications shall be made by the Engineer, and his decision shall be final and binding. In the event of a conflict between the Specifications and the Drawings, the Drawings shall take precedence.

III PREPARATION OF PROPOSAL

Each proposal shall be submitted on a bound form provided by the County Engineer or downloaded in its entirety from the following website www.sanduskycountyengineers.com and must contain the name of every person interested therein. The Proposal pages shall not be removed from the bound or downloaded set of Documents. The Proposal shall be enclosed in a sealed envelope addressed to the Owner with the name and address of the Bidder and identification of the Contract plainly endorsed thereon. If the Proposal is submitted by mail, the sealed envelope containing the Proposal shall be enclosed in another envelope, to avoid inadvertent premature opening of the sealed bid. All blank spaces in the Proposal shall be properly filled with ink opposite each item. Figures shall be used for Unit Bid Prices as indicated in the column headings for each item, and in the event of an error in extension the unit prices shown shall prevail.

IV WITHDRAWAL OF PROPOSAL

If a bidder wishes to withdraw his proposal, he may do so at any time prior to the time fixed for the opening of bids, without prejudice to himself. Bids opened and read may not be withdrawn for a period of 60 (sixty) calendar days after the scheduled closing time for receiving bids.

V BID GUARANTY

Each proposal shall be accompanied by a Bid Guaranty and Contract Bond, in the Amount of 100% of the Bid, to be held by the Owner; or a Certified or Cashier’s Check or a Letter of Credit in an amount of at least 10% of the amount bid, made payable to the Treasurer of Sandusky County, Ohio; to be held by the Owner, as a guarantee that in the event the Bid is accepted and a Contract awarded to the Bidder, the Contract will be executed and, if a Check or Letter of Credit is used, its faithful performance properly secured by an acceptable Bond for 100% of the amount of the Contract, and in default thereof said Bond or Check or Letter of Credit and the amount represented thereby shall be forfeited to the Owner in accordance with Section 153.54 of the Ohio Revised Code.

VI FORFEITURE

The Bidder to whom the Contract may be awarded shall appear at the office of the Owner with the sureties offered by him within ten (10) days, (Saturday and Sunday excepted), after the date of notification of the acceptance of his proposal and there execute the Contract for the work in the required number of copies; and shall furnish, if the Bidder used a Certified or Cashiers Check or a Letter of Credit as his bid guaranty, a Performance Bond in the form provided by the County, with acceptable surety, in the amount of 100% of his bid price. The Bidder shall also supply the affidavit required by Ohio Revised Code Section 5719.042. In case of failure to do so, the Bidder will be considered as having abandoned same, and the amount of his deposit shall be forfeited to and become the property of the Owner, in accordance with Section 153.54 of the Ohio Revised Code.
Ohio Revised Code 5719.042 which became effective September 21, 1982 is reproduced below:
Sec. 5719.042 AFTER THE AWARD BY A TAXING DISTRICT OF ANY CONTRACT LET BY COMPETITIVE BID AND PRIOR TO THE TIME THE CONTRACT IS ENTERED INTO, THE PERSON MAKING A BID SHALL SUBMIT TO THE DISTRICT'S FISCAL OFFICER A STATEMENT AFFIRMED UNDER OATH THAT THE PERSON WITH WHOM THE CONTRACT IS TO BE MADE WAS NOT CHARGED AT THE TIME THE BID WAS SUBMITTED WITH ANY DELINQUENT PERSONAL PROPERTY TAXES ON THE GENERAL TAX LIST OF PERSONAL PROPERTY OF ANY COUNTY IN WHICH

THE TAXING DISTRICT HAS TERRITORY OR THAT SUCH PERSON WAS CHARGED WITH DELINQUENT PERSONAL PROPERTY TAXES ON ANY SUCH TAX LIST, IN WHICH CASE THE STATEMENT SHALL ALSO SET FORTH THE AMOUNT OF SUCH DUE AND UNPAID DELINQUENT TAXES AND ANY DUE AND UNPAID PENALTIES AND INTEREST THEREON, IF THE STATEMENT INDICATES THAT THE TAXPAYER WAS CHARGED WITH ANY SUCH TAXES, A COPY OF THE STATEMENT SHALL BE TRANSMITTED BY THE FISCAL OFFICER TO THE COUNTY TREASURER WITHIN THIRTY DAYS OF THE DATE IT IS SUBMITTED.
A COPY OF THE STATEMENT SHALL ALSO BE INCORPORATED INTO THE CONTRACT, AND NO PAYMENT SHALL BE MADE WITH RESPECT TO ANY CONTRACT TO WHICH THIS SECTION APPLIES UNLESS SUCH STATEMENT HAS BEEN SO INCORPORATED AS A PART THEREOF.

VII RETURN OF DEPOSITS

Certified or Cashier's Checks or Letters of Credit submitted as bid deposits will be returned within 48 hours after the executed Contract and required Bond have been finally approved by the Owner.

VIII EXAMINATION OF WORK

Bidders must carefully examine the Plans and the entire site of the work and make all necessary investigations to inform themselves thoroughly as to the facilities for delivering, placing and operating the necessary equipment and for delivering and handling material for the work; and as to all difficulties that may be involved in the complete execution. Bidders must carefully examine the Contract, Plans, and Specifications for the work. The Owner will not be responsible in any manner for answers to any inquiries regarding the meaning of the drawings or specifications given prior to the awarding of the contract unless such answers are in writing and signed by the County Engineer.

IX LAWS AFFECTING PUBLIC WORK

The attention of the bidder is called to the laws of the State of Ohio and to local ordinances pertaining to contracts on public work, and to the statutory requirements of the State of Ohio relative to licensing of corporations organized under the laws of any other State.
The Contractor shall conform with all applicable provisions of Chapter 4115 of the Ohio Revised Code with respect to wages and working hours. A copy of the Minimum Wage Rate Schedule as determined by the Department of Industrial Compliance and Labor and is available at the following website http://www.com.ohio.gov/laws.
There shall be posted in a prominent and accessible place, on the site of the work, a legible statement of the schedule of wages specified in the contract to the various classifications of laborers, workmen, and mechanics employed. Said statement to remain posted during the life of each contract.
The Contractor shall conform with all applicable provisions of 153.59 and 153.60 of the Ohio Revised Code with respect to discrimination and intimidation on account of race, creed, sex, handicap, or color. Ohio Revised Code Section 153.59 and 153.60 are reproduced below and hereby made part of this contract.
153.59 DISCRIMINATION AND INTIMIDATION ON ACCOUNT OF RACE, CREED, SEX, HANDICAP, OR COLOR:
EVERY CONTRACT FOR OR ON BEHALF OF THE STATE, OR ANY TOWNSHIP, COUNTY, OR MUNICIPAL CORPORATION THEREOF, FOR THE CONSTRUCTION ALTERATION, OR REPAIR OF ANY PUBLIC WORK IN THE STATE SHALL CONTAIN PROVISIONS BY WHICH THE CONTRACTOR AGREES:
(A) THAT IN THE HIRING OF EMPLOYEES FOR THE PERFORMANCE OF WORK UNDER THIS CONTACT OR ANY SUBCONTRACT, NO CONTRACTOR, SUBCONTRACTOR, OR ANY PERSON ACTING ON HIS BEHALF, SHALL, BY REASON OF RACE, CREED, SEX, HANDICAP, OR COLOR, DISCRIMINATE AGAINST ANY CITIZEN OF THE STATE IN THE EMPLOYMENT OF LABOR OR WORKERS WHO IS QUALIFIED AND AVAILABLE TO PERFORM THE WORK TO WHICH THE EMPLOYMENT RELATES;
(B) THAT NO CONTRACTOR, SUBCONTRACTOR, NOR ANY PERSON ON HIS BEHALF SHALL, IN ANY MANNER, DISCRIMINATE AGAINST OR INTIMIDATE ANY EMPLOYEE HIRED FOR THE PERFORMANCE OF WORK UNDER THIS CONTRACT ON ACCOUNT OF RACE, CREED, SEX, HANDICAP, OR COLOR;
153.60 FORFEITURE
THE CONTRACT REFERRED TO IN SECTION 153.59 OF THE REVISED CODE SHALL PROVIDE AS A FORFEITURE FOR ANY BREACH OF THE PROVISIONS AGAINST DISCRIMINATION:
(A) THAT THERE SHALL BE DEDUCTED FROM THE AMOUNT PAYABLE TO THE CONTRACTOR BY THE STATE OR BY ANY TOWNSHIP, COUNTY, OR MUNICIPAL CORPORATION THEREOF, UNDER THIS CONTRACT, A FORFEITURE OF TWENTY-FIVE DOLLARS FOR EACH PERSON WHO IS DISCRIMINATED AGAINST OR INTIMIDATED IN VIOLATION OF THIS CONTRACT;
(B) THAT THE CONTRACT SHALL BE CANCELED OR TERMINATED BY THE STATE OR BY ANY TOWNSHIP, COUNTY, OR MUNICIPAL CORPORATION THEREOF, AND ALL MONEY TO BECOME DUE HERE UNDER MAY BE FORFEITED, FOR A SECOND OR SUBSEQUENT VIOLATION OF THE TERMS OF THIS SECTION OF THE CONTRACT.

The Contractor shall conform with all applicable provisions of Chapter 4167 of the Ohio Revised Code with respect to Occupational Safety and Health Division.
Safety and Health Provisions: The Contractor is bound by all provisions of the Federal Occupational Safety and Health Act of the 1970 (OSHA), and all other applicable federal, state, and local laws, regulations, findings, and orders relating to safety and health conditions on the work site.

X INSURANCE

1. WORKMEN'S COMPENSATION INSURANCE - The Contractor and any subcontractors shall take out and maintain such insurance as will protect them from claims under Workmen's Compensation laws, disability benefit laws or other similar employee benefit laws and from claims for damages because of bodily injury, occupational sickness or disease, or death of their employees. Proof of compliance with Workmen's Compensation laws shall be filed with the Owner until the date of final payment for the Project and the Contractor shall indemnify and save harmless the Owner from any contributions or liability therefor.
2. BODILY INJURY AND PROPERTY DAMAGE INSURANCE - The Contractor shall provide insurance for (1) Comprehensive Public Liability and Property Damage, Contractor's Protective Liability, Contractual Liability, Completed Operations-Products, and (2) Automobile Bodily Injury and Property Damage Liability, including owned, non-owned and hired vehicles. Any combination of the Contractor's coverage limits, including umbrella-excess liability limits shall provide no less than $1,000,000 single limit bodily injury and property damage liability coverage.
The following coverages, if excluded from the Contractor's standard coverages, shall have the exclusions deleted for policies provided under this Contract: (1) Underground damage caused by mechanical equipment coverage, (2) collapse of or structural injury to buildings coverage, if the nearness of buildings warrants this type of coverage, and (3) blasting shall be covered, if explosives are used in the performance of this Contract.
The contractor shall indemnify and hold harmless the owner and their agents and employees from and against all claims, losses, and expenses, which may occur as a result of bodily injury sickness, disease, or death, or to injury to or destruction of tangible property including the loss of use resulting there from, caused in whole or part by any negligent act or omission of the contractor, any subcontractor, anyone directly or indirectly employed by any of them or anyone for whose acts any of them may be liable. This shall be evidenced by a Certificate of Insurance naming the Owner, its officials, employees and agents as additional insureds. Such insurance shall be primary, and any insurance carried by the County shall be secondary and not participating.
Insurance shall be provided by an insurance company authorized to do business in the State of Ohio, shall be approved by the Owner, and shall remain in force until the date of final payment for the Project. Before starting work, the Contractor shall furnish a certificate (accord form) certifying the required coverages. Policies (and certificates) shall contain the following endorsements: "The company agrees that 30 days prior to cancellation or reduction of the insurance afforded by this policy with respect to the Contract involved, written notice will mailed to the Owner."
3. BUILDER'S RISK INSURANCE - The Contractor shall take out and maintain Builder's Risk Insurance on Bridges and Buildings against loss by fire, extended coverage, vandalism and malicious mischief on the insurable portion of the Project. Such insurance shall be in an amount of a minimum of $3,000,000.00 and may vary with the extent of the work completed, but shall at all times be at least equal to the amount previously paid by the Owner on account of work and materials, plus the value of work and materials furnished or delivered by the Contractor but not paid for by the Owner. Insurance shall be issued in the names of the Owner and the Contractor as joint insured as their interests may appear, and shall remain in full force and effect until the date of final payment for the Project. The Owner shall be furnished the original Builder's Risk Policy. It will be returned to the Contractor upon final acceptance of the contract.

XI CONTRACT DOCUMENTS

The Advertisement, the Information to Bidders, the Proposal, the Special Provisions, the Plans, the Construction and Material Specifications, of the State of Ohio, Department of Transportation and the Contract shall in the aggregate constitute the Contract Documents and are complementary. What is called for in any one document shall be as binding as if called for by all. The Contract prices bid in the Proposal shall be deemed to include all costs of whatever nature involved in the proper and complete execution of work.

XII MATERIALS AND WORKMANSHIP

Unless otherwise stipulated in the specifications, all workmanship, equipment, materials and articles incorporated in the work covered by this contract are to be new and of the best grade of their respective kinds for the purpose. The Contractor shall, if required, furnish evidence as to kind and quality of materials. The Contractor shall furnish to the Engineer for his approval, the name of the manufacturer of machinery, mechanical and other equipment, which he contemplates installing, together with their performance capacities and other pertinent information.

If not specified in detail, material or work called for in this contract shall be furnished and performed in accordance with well-known established practice and standards recognized by architects, engineers and the trade.
When required by the specifications or when called for by the Engineer, the Contractor shall furnish for approval full information concerning the materials or articles which he contemplates incorporating in the work. Samples of materials shall be submitted for approval when so directed. Machinery, equipment, materials and articles installed or used without such approval shall be at the risk of subsequent rejection.
Whenever, in the plans and specifications, there is called for a product of a specific manufacturer it is understood that such is merely descriptive of the minimum qualifications and not restrictive as to manufacturer. Substitutions of equivalent items may be made if approved by the Engineer, whose decision shall be final.

XIII INSPECTION
The Contractor shall at all times provide convenient access and safe and proper facilities for the inspection of all parts of the work. No work, (except such shop work as may be so permitted), shall be done except in the presence of the Engineer or his assistants. No materials of any kind shall be used upon the work until it has been inspected and accepted by the Engineer. All materials rejected shall be immediately removed from the work and not again offered for inspection. Any materials or workmanship found at any time to be defective shall be remedied at once, regardless of previous inspection. The inspection and supervision of the work by the Engineer is intended to aid the Contractor in supplying labor and materials in accordance with the specifications, but such inspection shall not operate to release the Contractor from any of his contract obligations.

XIV ESTIMATED QUANTITIES
The Contractor agrees; that the quantities of work as indicated on the plans are only approximate; that during the progress of the work the County may find it advisable, and shall have the right, to omit portions of the work and to increase or decrease the quantities; and, that the County reserves the right to add or to take from any item as may be deemed necessary or desirable. The Contractor shall and will at no time make claims for anticipated profit or loss of profits, or damages of any kind, because of any difference between the quantities of the various classes of work actually done, or of the material actually furnished, and the said estimated quantities.

XV EXTRA WORK
The Contractor shall do any work and/or furnish any materials not herein provided for, which in the opinion of the Engineer, may be found necessary or desirable for the completion of the work. No extra work will be paid for or allowed unless the same was done upon written contract with the Owner, and after all legal requirements have been complied with. The Contractor agrees that he will accept as full compensation for extra work, so ordered an amount determined by one of the following methods:
1. Unit prices stated in the proposal, if applicable; or
2. A price mutually agreed upon, in writing, by the Engineer and the Contractor; or
3. A sum equal to the actual net cost of materials and labor (including premium for Workmen's Compensation Insurance) plus agreed rental, for equipment necessary for the extra work, to the sum of which may be added fifteen (15%) per cent as compensation for all other items of expense, including overhead, superintendence, use of small tools and other insurance.
The decision of the Engineer as to whether extra work in fact has been performed shall be conclusive and binding upon both parties to this contract.

XVI TIME OF COMMENCEMENT AND COMPLETION AND LIQUIDATED DAMAGES
The Contractor shall commence work within ten (10) days after the notice to proceed and the rate of progress shall be such that the whole work shall be completed and the site cleaned up in accordance with the contract, unless an extension of completion date shall have been granted by the Owner.
The time of completion of the parts of the work is of the essence of the contract, and should the Contractor neglect, refuse, or fail to complete the work to be done under the contract within the time herein agreed upon, after adding all extensions of time granted by the Owner, then in that event the Owner shall have and is hereby given the right to deduct and retain out of such money, which be then due, or which may become due and payable to the Contractor for the work to be done under this contract, the sum of Two Hundred Dollar ($200.00) per day for each and every calendar day that the work is delayed in its completion beyond the agreed time. Said sum per-day for such delay, failure or non-completion shall be deemed, taken and treated as liquidated damages which the Owner will suffer by reason of such default, including but not limited to extra cost of engineering and inspection, and not by way of penalty.

XVII NO WAIVER OR RIGHTS
Neither the inspection of the Engineer or Owner or any of their employees, nor any order, measurement or certificate by the Engineer or Owner, nor any order by the Owner for the payment of money, nor any payment for, or acceptance of the whole or any part of the work by the Engineer or Owner, nor any extension of time, nor any possession taken by the Owner or its employees, shall operate as a waiver of any provision of the Contract, or of any power herein reserved to the Owner, or any right to damages herein provided, nor

shall any waiver of any breach of this Contract be held to be a waiver of any other or subsequent breach. Any remedy provided in this Contract shall be taken and construed as cumulative; that is, in addition to each and every other remedy herein provided; and in addition to all other suits, actions or legal proceedings, the Owner shall also be entitled as of right to a writ of injunction against any breach of any of the provisions of the Contract.

XVIII FINAL PAYMENT TO RELEASE THE OWNER

The acceptance by the Contractor of the final payment shall be and shall operate as a release to the Owner of all claims and all liability to the Contractor for all things done or performed or relating to the work, and for every act and neglect of the Owner and others relating to or arising out to the work, excepting only his claims, if any, for amount withheld by the Owner, upon final payment. No payment however, final or otherwise shall operate to release the Contractor nor his Sureties for any obligation upon or under this Contract or the Contractor's Bond.

XIX SEQUENCE AND PROGRESS OF WORK

Before commencing work, the Contractor shall submit a schedule of contemplated progress of the work to the Engineer for approval and shall make such changes in the schedule as the Engineer may require for approval.

The Engineer shall have the power to direct the order and sequence of the work, which in general shall be to coordinate the Construction of the several parts of the contract to a successful completion as rapidly as possible. If, at any time before the commencement or during the progress of the work, the materials and appliances used or to be used appear to the Engineer as insufficient or improper for securing the quality of work required, or the required rate of progress, he may order the Contractor to increase efficiency or to improve their character and the Contractor shall conform to such order, but the failure of the Engineer to demand any increase of such efficiency or any improvement shall not release the Contractor from his obligations to secure the quality of work or the rate of progress specified.

XX MONTHLY ESTIMATE

On or about the first day of each month the Engineer will make an approximate estimate of the value of the work done, whenever said estimate of work done since the last previous estimate exceeds One Thousand Dollars ($1,000.00) in amount. The Contractor shall furnish to the Engineer such detailed information as he may request to aid him as a guide in the preparation of monthly estimates. Estimates approved by the first (1st) of the month will be paid by the twenty-fifth (25th) of the month. Estimates approved by the fifteenth (15th) of the month will be paid by the eleventh (11th) of the following month. Ninety-two percent (92%) of such approved estimate will be paid, in accordance with Section 153.12 - 153.14 of the Ohio Revised Code. No additional retention will be withheld from estimates made after fifty percent (50%) of the contract amount has been paid.

XXI FINAL ESTIMATE

The Engineer shall within thirty (30) days after the work has been finally and fully completed, in accordance with the contract and specifications make a final estimate of the work done under such contract and the value thereof. And the Owner shall, within thirty (30) days after such estimate is made and certified, and upon completion of the work to the approval of the Engineer, pay the entire sum so found to be due hereunder, after deducting all percentages and amounts to be kept and retained under any provision of the contract documents. All prior estimates and payment shall be subject to corrections in the final estimate and payment, but in the absence of error or manifest mistakes, it is agreed that all estimates on the certificate of the Engineer, when approved by the Owner, shall be conclusive of the work done and materials furnished.

Before the final payment is made, the Contractor must furnish an affidavit to the Owner that all bills for labor and materials have been paid; and an affidavit to the Owner stating that he has fully complied with Chapter 4115 of the Ohio Revised Code; and an affidavit to the Owner stating that he has fully complied with Sections 153.59 and 153.60 of the Ohio Revised Code.

XXII ENGINEER'S ESTIMATE

The Engineer's estimate for the work is $355,000.00.

PROPOSAL

BOARDS OF BALLVILLE & GREEN CREEKTOWNSHIP TRUSTEES, SANDUSKY COUNTY, OHIO

The undersigned, having full knowledge of the site, plans and specifications for the following improvements, and the conditions of this proposal, hereby agrees to furnish all the services, labor, materials and the equipment necessary to complete the 2023 RESURFACING OF VARIOUS TOWNSHIP ROADS IN BALLVILLE & GREEN CREEK TOWNSHIPS according to the plans, specifications and completion date and to accept the unit price specified below for each item as full compensation for the work in this proposal.

UNIT PRICE CONTRACT

Ref.	Spec. Item No.	Approx. Quantities	Unit	Item	Unit Price Bid	Total Amount Bid
1	103.05	Lump	Sum	Premium for Contract Performance Bond		
2	253	650	S.Y.	Pavement Repair (Contingency)		
3	254	1,960	S.Y	Pavement Planing, Asphalt Concrete, as per Plan		
4	407	4,030	Gal.	Non-Tracking Tack Coat		
5	441	1,130	Ton	Asphalt Concrete Intermediate Course, Type 1, (449)		
6	441	2,150	Ton	Asphalt Concrete Surface Course, Type 1, (449), PG64-22		
7	614	Lump	Sum	Maintaining Traffic		
8	614	0.69	Mile	Work Zone Center Line, Class II		
9	617	730	Ton	Compacted Aggregate, Type 411		
10	642	0.69	Mile	Center Line, Type 1		
11	644	1	Each	Railroad Symbol Marking, 96 inch		

TOTAL AMOUNT OF THE BID…..…… _____

Have you double checked your bid??? Errors or omissions could result in your bid's being declared informal.

This page is a part of the proposal of ……

(Bidder)

……

(Signature)

PROPOSAL

PROJECT- 2023 RESURFACING OF VARIOUS TOWNSHIP ROADS, IN BALLVILLE & GREEN CREEK TOWNSHIPS, SANDUSKY COUNTY, OHIO

PREQUALIFICATION OF BIDDERS- The right to make such investigations as may be deemed necessary to determine the ability of the bidder to perform the work reserved. The bidder shall furnish all such information and data for this purpose as requested. The right is reserved to reject any bid, if the evidence submitted by or investigation of, such bidder fails to establish that such bidder is properly qualified to carry out the obligations of the contract.

COMPLETION DATE – September 30, 2023

LABOR - MATERIAL BREAKDOWN
In case of errors in extension or addition, the ratio between Labor and Material indicated below shall be maintained.

Amount Bid for Labor …….

Amount Bid for Materials …….

Total Amount Bid …….

(This page must be executed, in the appropriate place, prior to submission of this bid)

WRITTEN CONTRACT –

On acceptance of the for said work …… do hereby bind …… this …….day of ……., 20……..,
(I OR WE) **(MYSELF OR OURSELVES)**

to enter into a written contract with the Ballville & Green Creek Township Trustees within ten days from date of the notice of award.

IF AN INDIVIDUAL, SIGN BELOW:

…….. ……
(Name) **(Post Office Address)**

IF AN INDIVIDUAL DOING BUSINESS UNDER A TRADE NAME, SIGN BELOW:

…….. ……
(Trade Name) **(Post Office Address)**

……**Sole Owner** **By**……

IF A PARTNERSHIP, SIGN BELOW:

…… ……
(Post Office Address)

By……...

…… …….
(Partner) **(Post Office Address)**

…… …….
(Partner) **(Post Office Address)**

…… …….
(Partner) **(Post Office Address)**

IF A CORPORATION, SIGN BELOW:

……
(Name of Corporation)

Incorporated under the laws of the State of …… **By** ……
(Signature) **(Title of Officer Signing)**

BID GUARANTY AND CONTRACT BOND

(Section 153.571 Ohio Revised Code)

KNOW ALL MEN BY THESE PRESENTS:

That we, the undersigned (1)_____

(full name or legal title of Contractor and address)

_____

as principal and (2) _____

(full name or legal title of Surety)

_____as sureties, are hereby held and firmly bound unto the State of Ohio, for the use of Ballville & Green Creek Townships hereinafter called the Obligee, in the penal sum of the dollar amount of the bid submitted by the Principal to the Obligee on _____, 20_____to undertake the project known as:_____

(description of project)

_____

The penal sum referred to herein shall be the dollar amount of the Principal's bid to the Obligee, incorporating any additive or deductive alternate proposals made by the Principal on the date referred to above to the Obligee, which are accepted by the Obligee. In

no case shall the penal sum exceed the amount of _____dollars ($_____)

(surety ceiling on the amount of the bond)

For the payment of the penal sum well and truly to be made, we hereby jointly and severally bind ourselves, our heirs, executors, administrators, successors, and assigns.

THE CONDITION OF THE ABOVE OBLIGATION IS SUCH, that whereas the above named Principal has submitted a bid on the above referred to project;

NOW, THEREFORE, if the Obligee accepts the bid of the Principal and the Principal fails to enter into a proper contract in accordance with the bid, plans, details, specifications, and bills of material; and in the event the Principal pays to the Obligee the difference not to exceed ten percent of the penalty hereof between the amount specified in the bid and such larger amount for which the Obligee may in good faith contract with the next lowest bidder to perform the work covered by the bid: or in the event the Obligee does not award the contract to the next lowest bidder and resubmits the project for bidding, the Principal will pay the Obligee the difference not to exceed ten percent of the penalty hereof between the amount specified in the bid, or the costs, in connection with the resubmission, of printing new contract documents, required advertising and printing and mailing notices to prospective bidders, whichever is less, then this obligation shall be null and void, otherwise to remain in full force and effect. If the Obligee accepts the bid of the Principal and the Principal within ten days after the awarding of the contract, enters into a proper contract in accordance with the bid, plans, details, specifications, and bills of material, which said contract is made a part of this bond the same as though set forth herein; and

IF THE SAID Principal shall well and faithfully perform each and every condition of such contract; and indemnify the Obligee against all damage suffered by failure to perform such contract according to the provisions thereof and in accordance with the plans, details, specifications, and bills of material therefore; and shall pay all lawful claims of subcontractors, material men, and laborers, for labor performed and materials furnished in the carrying forward, performing, or completing of said contract: we agreeing and assenting that this undertaking shall be for the benefit of any material man or laborer having a just claim, as well as for the Obligee herein; then this obligation shall be void; otherwise the same shall remain in full force and effect; it being expressly understood and agreed that the liability of the Surety for any and all claims hereunder shall in no event exceed the penal amount of this obligation as herein stated.

THE SAID Surety hereby stipulates and agrees that no modifications, omissions, or additions, in or to the terms of the said contract or in or to the plans and specifications therefore shall in any way affect the obligations of said Surety on this bond, and it does hereby waive notice of any such modifications, omissions or additions to the terms of the contract or to the work or to the specifications.

(Continued on next page)

BID GUARANTY AND CONTRACT BOND CONTINUED

SIGNED AND SEALED This_____day of _____, 20_____, In the presence of

_____
(Witness to Principal's signature)

_____
Principal

By:_____

_____
(Witness to Surety's signature)

Title:_____

Approved _____, 20_____

_____
Surety

_____

By:_____
Attorney-in Fact

_____

_____
Surety company address

_____
Boards of Ballville & Green Creek Township Trustees

_____

_____
Surety Agent's name and address

_____

I hereby approve the form of the forgoing Contract and Bond.
_____, 20_____ _____Pros, Atty.
Attach corporation seal of principal if corporation.
Attach corporation seal of surety company if signing as surety.
(1) If a corporation, insert "A corporation organized under the laws of the State of_____,
with it's principal place of business at _____in Ohio".
(2) If a surety company, insert "A corporation organized under the laws of the State of _____and duly authorized to transact business within the State of Ohio."

PROPOSAL

Attach to this page:

A properly executed Power of Attorney showing the authority of the person or persons executing the bond for the Surety or Sureties at the date of the bond;

or

A Certified Check

or

A Cashiers Check

or

A Letter of Credit

Note: The blank on the bond form where surety indicates the ceiling amount of the bond is not the penal sum of the bond, but the maximum surety will bond the bidder. If there is an error in the extension of unit prices and the total bid exceeds the ceiling amount indicated, the bid will be declared informal and may be rejected. In the event the contract were offered to the bidder, a new bond would be required. The words "Unlimited Dollars" are acceptable, if that is in fact the relationship between the bidder and his surety. The words "100% of the Contract" are also acceptable. The ceiling amount should not exceed the maximum dollar amount indicated on the Power of Attorney.

Affidavit

FOR

(CONTRACT)

STATE OF OHIO)

COUNTY OF _____)

_____, being duly sworn that he is a (sole proprietorship-partnership-corporation) having been awarded a public contract let by competitive bid and that by this statement says that at this time (he-it) (is-are) not charged with any delinquent personal taxes on the general tax list of personal property of any county in which the taxing district of the Sandusky County Commissioners has territory.

_____
(Signature of owner-partner-office)

of_____being first duly sworn, deposes and says that this statement made above, concerning delinquent personal property taxes is true. Sworn to before me and signed in my presence this _____ day of _____, 20_____.

_____
(Notary Public)

My commission expires:_____

CERTIFICATION OF PERSONAL PROPERTY TAX

_____

being the fiscal officer of _____, a political subdivision of the State of Ohio, hereby certifies the above statement to the county treasurer.

_____
Fiscal Officer of Sandusky County,
a Political Subdivision of the State of Ohio

This certification is in complete with Section 5719.042 of the Ohio Revised Code, which requires a certification of delinquent personal property by any successful bidder prior to the execution of the contract of a political subdivision and in the event there are any due and unpaid delinquent taxes, a copy of this shall be transmitted to the county treasurer within thirty days.

VERIFICATION OF "NO FINDING FOR RECOVERY"

No political subdivision shall award a contract for goods, services, or construction to a person against whom a Finding for Recovery has been issued by the Auditor of the State, if the Finding for Recovery is unresolved.

The undersigned, by their signature and title, document that no "Finding for Recovery" is outstanding for the bidder.

By:_____

Title:_____

CONTRACT AGREEMENT

This agreement, made this……..day of …….., A. D. ……...…
Between the Boards of Ballville & Green Creek Township Trustees, hereinafter called the Party of the First Part, and ……...

…….……...

of ……...and…….....successors, executors, administrators and assigns, hereinafter called the Party of the Second Part,

WITNESSETH: That for and in consideration of payments hereinafter mentioned to be made by Party of the First Part, Party of the Second Part agrees to furnish all materials excepting the following: …….

……..……..

and all appliances, tools, and labor, and perform all the work that may be required for the construction and completion of Improvement No……known as……..…...

……..…...
according to the plans and specifications and estimates for the construction of said improvement on file in the offices of said Trustees and the Engineer of said County, and to the satisfaction and acceptance of the Party of the First Part, and subject to inspection at all times and approval of the County Engineer and said Trustees.

The Party of the Second Part also agrees to complete said improvement in accordance with the completion date set forth in the proposal.

The Party of the Second Part further covenants and agrees that the following papers shall be bound with or accompany and be an essential part of this contract: Advertisement, Information to Bidders, plans and specifications, contract bond and approximate estimate and proposal.

In consideration of the premises the Party of the First Part agrees to pay to the Party of the Second Part the approximate sum of …….....……($.....) Dollars. The actual sum to be paid, however, will be the aggregate total determined by the work actually performed according to the plans and specifications by the Party of the Second Part, calculated upon the unit prices set out in this proposal hereto attached and made a part hereof.

Sureties on any bond provided in this contract and insurance companies writing any insurance policies provided in the contract, and the contractor by the execution of the bid and contract shall by the same agree to and herby authorize any attorney at law to appear in any court of record in Sandusky County, State of Ohio in any action or proceeding, either in contract or tort, commenced by any person, firm or corporation claiming to suffer or incur any damage or injury arising out of the construction of this contract or the attempted performance, non-performance, improper performance of the work done in connection therewith, or caused by the misfeasance or malfeasance in an attempt to carry out or perform said contract. Said parties herby waive the issuance and service of summons and enter appearance of such party in any such action or proceedings; provided that no judgement or decree will be taken thereafter in such legal action or proceedings, until after three weeks shall elapse after such attorney at law shall notify by registered mail such party at his or it's business address designated on such document of the fact:

a. of such waiver and entry of appearance,
b. with the name of such action,
c. title of same,
d. the name of the court,
e. the date of filing of such waiver and entry of appearance,
f. furnish a copy of the petition, and
g. furnish a copy of such waiver and entry of appearance in such action or proceedings to such party whose appearance is entered.

IN WITNESS WHEREOF, The Party of the First Part has hereunto subscribed by the Board of Township Trustees, and the Party of the Second Part has affixed……name.

(Continued on next page)

CONTRACT AGREEMENT CONTINUED

Attest:

……., Ballville

……., Green Creek

Fiscal Officers, Boards of Ballville & Green Creek Township Trustees

I hereby certify that there is

$.....……..……

in the following ……..……
Funds of Ballville & Green Creek Townships not otherwise appropriated to satisfy the above payment of the above mentioned contract.

If a partnership, so state, giving names and post office addresses of all partners on lines opposite.

If a corporation, give full corporation name and state under the laws of what state you are incorporated: officer signing should add his title after signature.

Ballville Township Board of Trustees

By……..……

……..……

……..……

Green Creek Township Board of Trustees

By……..……

……..……

……..……

Party of the First Part

Contractor

……...…

By……..……

……..…….

……..…..

……..……

……..……

Party of the Second Part

NOTE: A CONTINGENCY AMOUNT OF ITEM 253 – PAVEMENT REPAIR HAS BEEN SET UP FOR THIS PROJECT. FOR A DESCRIPTION, PLEASE REFER TO THE SUPPLEMENTAL SPECIFICATIONS.
(50 S.Y. +/–)

RD. NO. T.R. 507 Old Plank Rd.

BY NDM DATE FEB. 2023

BALLVILLE TWP.

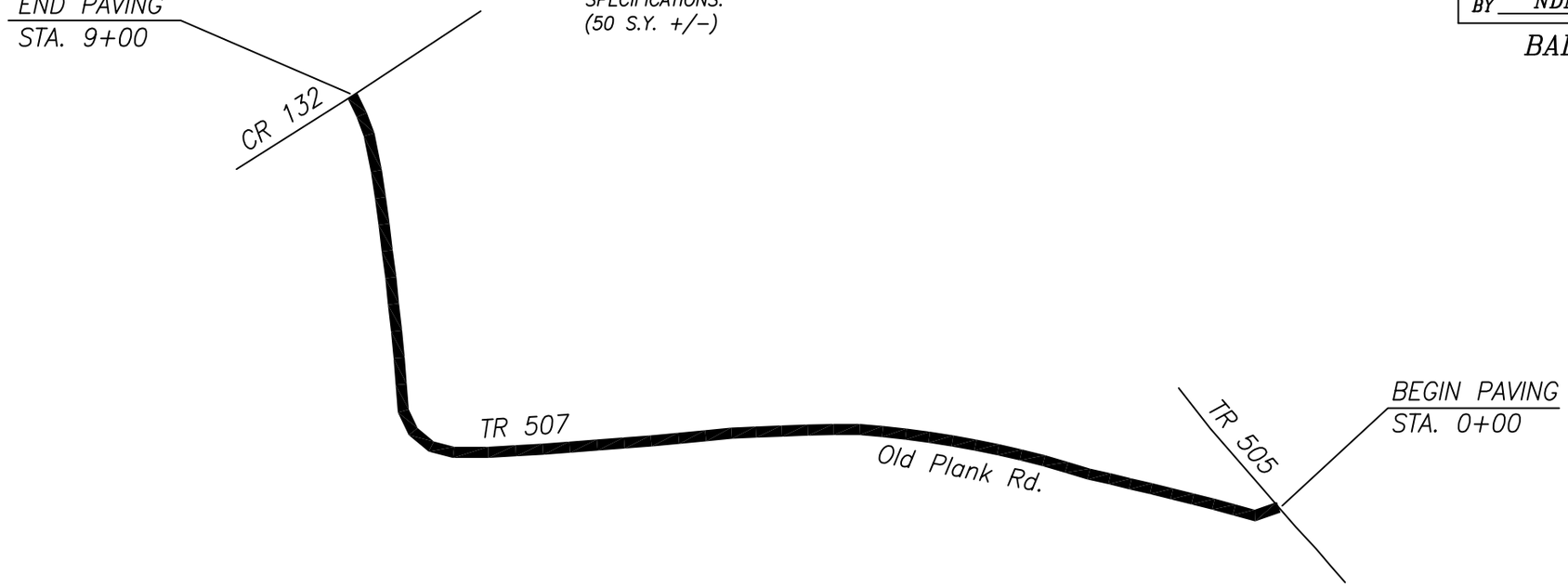

NO SCALE

NOTE: PAVE ROAD FULL WIDTH (SEE SUPPLEMENTAL SPECIFICATIONS)

*APPLICATION ON EXISTING PAVEMENT (OR MILLED SURFACE)
**APPLICATION ON INTERMEDIATE COURSE

FROM	TO	LENGTH LIN. FT.	TYPICAL WIDTH	407* TACK @.08 GAL./S.Y. GALS.	407** TACK @.05 GAL./S.Y. GALS.	ITEM 254 PAVEMENT PLANING, A.P.P. THICKNESS	ITEM 254 S.Y.	ITEM 441 ASPHALT CONCRETE INTERMEDIATE COURSE TYPE 1, (449) THICKNESS	ITEM 441 TONS	ITEM 441 ASPHALT CONCRETE INTERMEDIATE COURSE TYPE 2, (449) THICKNESS	ITEM 441 TONS	ITEM 441 ASPHALT CONCRETE SURFACE COURSE TYPE 1, (449) PG64-22 THICKNESS	ITEM 441 TONS	ITEM 614 WORK ZONE CENTER LINES CLASS II MILES	ITEM 614 WORK ZONE LANE LINES CLASS II MILES	ITEM 617 COMPACTED AGGREGATE AS PER PLAN TONS
0+00	5+85	585	18'	95	60			0–0.5"	35			1.25"	85			35
5+85	9+00	315	19'	55	35			0–0.5"	20			1.25"	50			20
Allowance for driveways, intersections, width variations, etc.				10	5		50		5				10			5
			TOTAL	160	100		50		60				145			60

D–1

BALLVILLE – T.R. 507 (OLD PLANK RD.)

RD. NO. T.R. 505
Lutz St.\Cemetery St.\Short St.

BY NDM DATE FEB. 2023

BALLVILLE TWP.

NOTE: A CONTINGENCY AMOUNT OF ITEM 253 – PAVEMENT REPAIR HAS BEEN SET UP FOR THIS PROJECT. FOR A DESCRIPTION, PLEASE REFER TO THE SUPPLEMENTAL SPECIFICATIONS.
(100 S.Y. +/–)

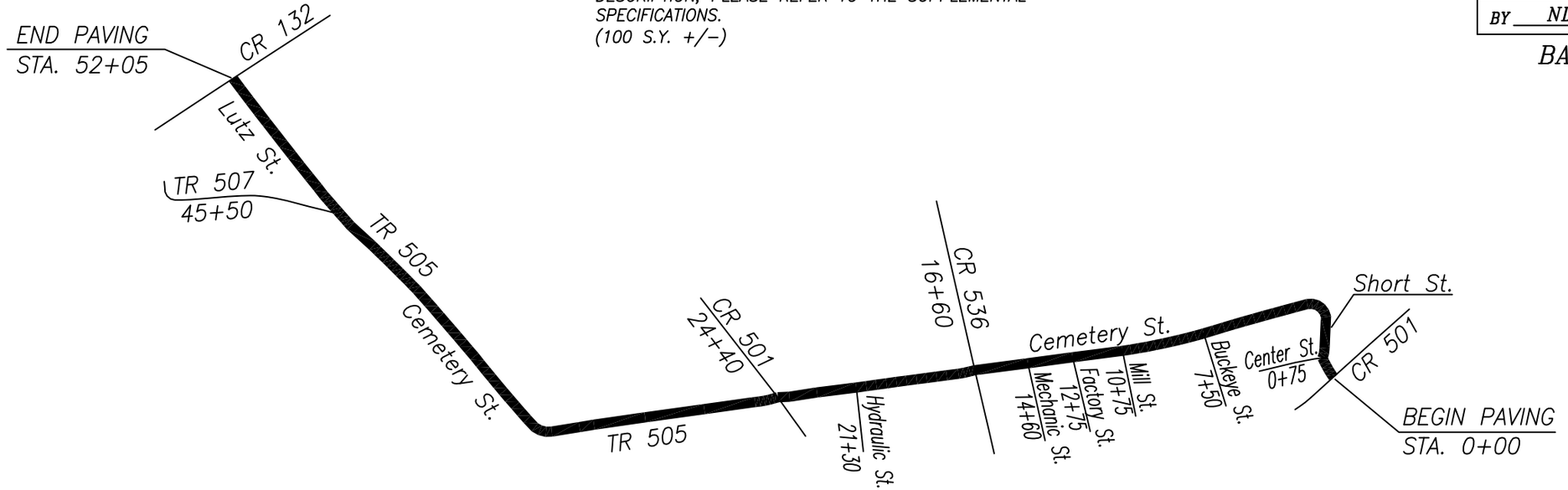

NO SCALE

NOTE: PAVE ROAD FULL WIDTH (WHERE POSSIBLE)
(SEE SUPPLEMENTAL SPECIFICATIONS)

*APPLICATION ON EXISTING PAVEMENT (OR MILLED SURFACE)
**APPLICATION ON INTERMEDIATE COURSE

FROM	TO	LENGTH LIN. FT.	TYPICAL WIDTH	407* TACK @.08 GAL./S.Y. GALS.	407** TACK @.05 GAL./S.Y. GALS.	ITEM 254 PAVEMENT PLANING, A.P.P. THICKNESS	ITEM 254 S.Y.	ITEM 441 ASPHALT CONCRETE INTERMEDIATE COURSE TYPE 1, (449) THICKNESS	ITEM 441 TONS	ITEM 441 ASPHALT CONCRETE INTERMEDIATE COURSE TYPE 2, (449) THICKNESS	ITEM 441 TONS	ITEM 441 ASPHALT CONCRETE SURFACE COURSE TYPE 1, (449) PG64-22 THICKNESS	ITEM 441 TONS	ITEM 614 WORK ZONE CENTER LINES CLASS II MILES	ITEM 614 WORK ZONE LANE LINES CLASS II EACH	ITEM 617 COMPACTED AGGREGATE AS PER PLAN EACH
45+50	52+05	655	22'			2"	1,605									
Butt joints at intersections						2"	70									
0+00	10+75	1,075	18'	175	110			0–0.5"	60			1.25"	150			65
10+75	12+75	200	14'	25	20			0–0.5"	10			1.25"	25			15
12+75	16+60	385	18'	65	40			0–0.5"	25			1.25"	55			25
16+60	45+50	2,890	17'	440	275			0–0.5"	155			1.25"	380			165
45+50	52+05	655	22'	130	80			0–0.5"	45			1.25"	115			40
Allowance for driveways, intersections, width variations, etc.				45	30		85		15				40			15
			TOTAL	880	555		1,760		310				765			325

D–2 BALLVILLE – T.R. 505 (LUTZ\CEMETERY\SHORT ST.)

RD. NO. Chudzinski Park Dr.

BY NDM DATE FEB. 2023

BALLVILLE TWP.

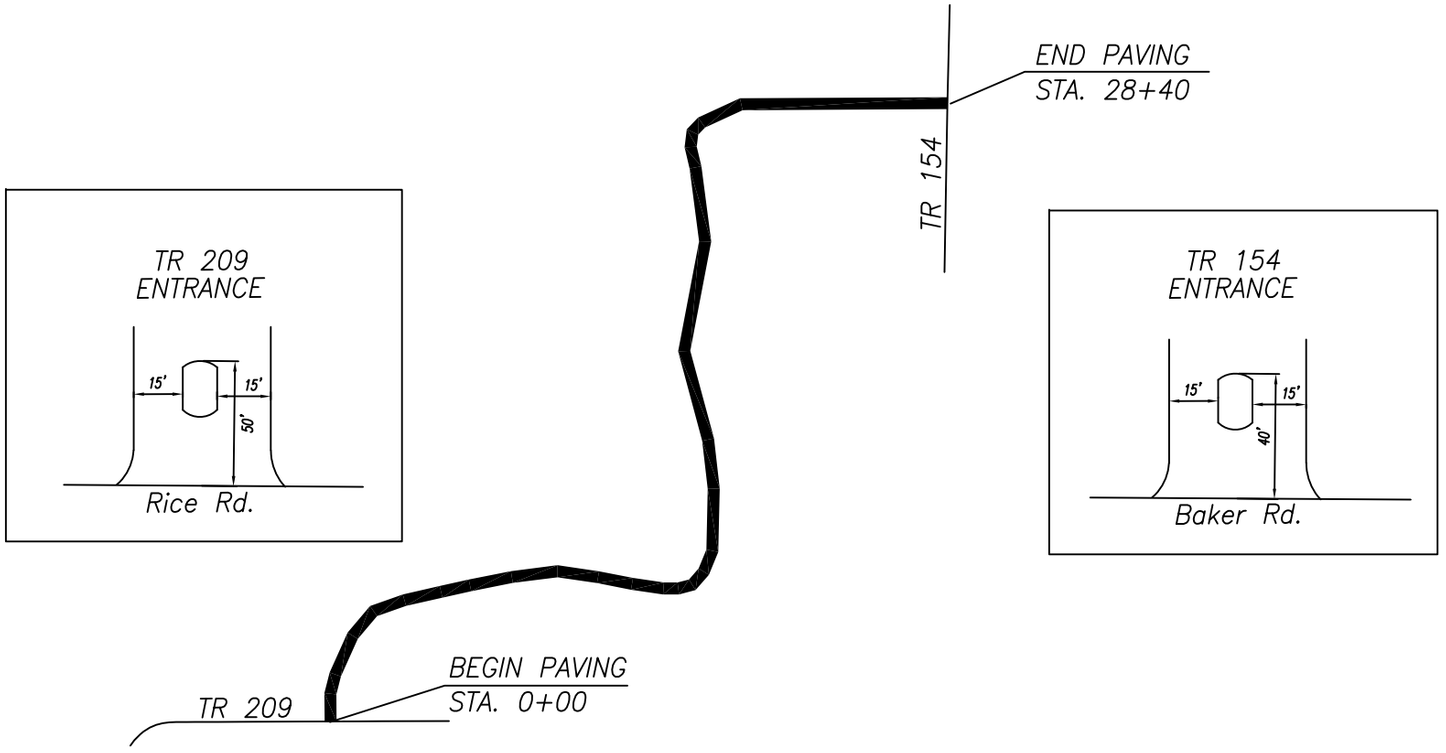

NO SCALE

*APPLICATION ON EXISTING PAVEMENT (OR MILLED SURFACE)
**APPLICATION ON INTERMEDIATE COURSE

FROM	TO	LENGTH LIN. FT.	TYPICAL WIDTH	407* TACK @.08 GAL./S.Y. GALS.	407** TACK @.05 GAL./S.Y. GALS.	ITEM 254 PAVEMENT PLANING, A.P.P. THICKNESS	ITEM 254 S.Y.	ITEM 441 ASPHALT CONCRETE INTERMEDIATE COURSE TYPE 1, (449) THICKNESS	ITEM 441 TONS	ITEM 441 ASPHALT CONCRETE INTERMEDIATE COURSE TYPE 2, (449) THICKNESS	ITEM 441 TONS	ITEM 441 ASPHALT CONCRETE SURFACE COURSE TYPE 1, (449) PG64-22 THICKNESS	ITEM 441 TONS	ITEM 614 WORK ZONE CENTER LINES CLASS II MILES	ITEM 614 WORK ZONE LANE LINES CLASS II MILES	ITEM 617 COMPACTED AGGREGATE AS PER PLAN TONS
0+00	0+50	50	30'	15	10			0-0.75"	10			1.25"	15			0
0+50	28+00	2,750	24'	590	370			0-0.75"	310			1.25"	510			80
28+00	28+40	40	30'	15	10			0-0.75"	10			1.25"	10			0
Allowance for driveways, intersections, width variations, etc.				35	20		50		20				30			5
			TOTAL	655	410		50		350				565			85

D-3

BALLVILLE - CHUDZINSKI PARK DR.

RD. NO. Chudzinski Park Parking Lot

BY NDM DATE FEB. 2023

BALLVILLE TWP.

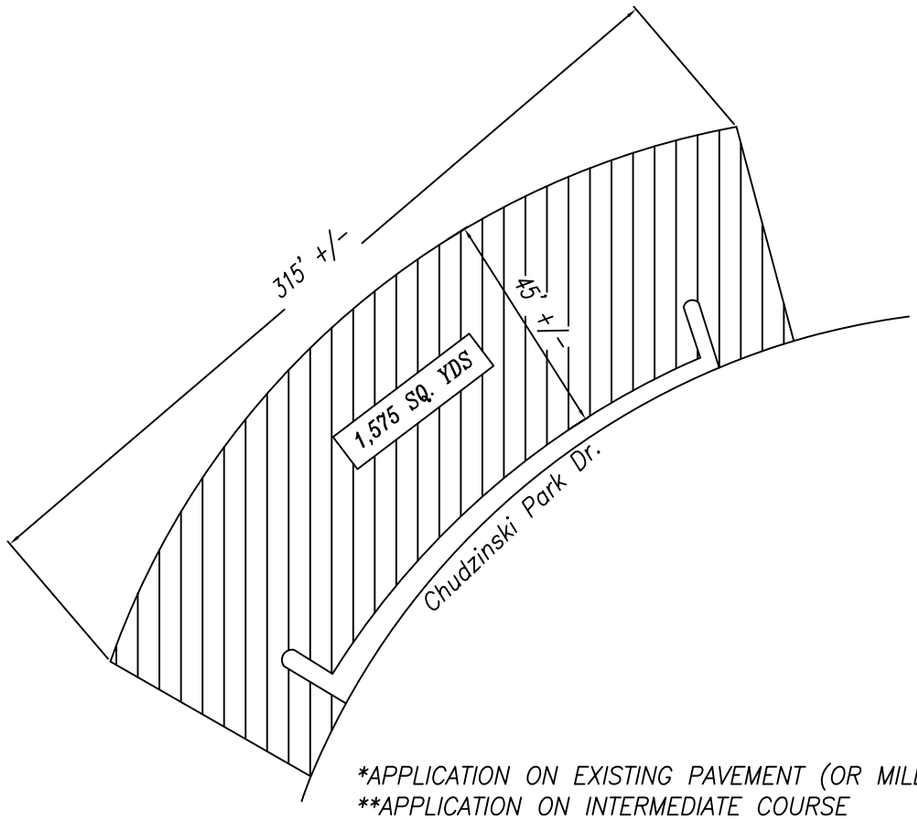

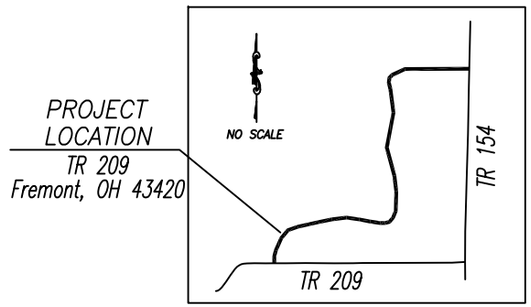

NO SCALE

*APPLICATION ON EXISTING PAVEMENT (OR MILLED SURFACE)
**APPLICATION ON INTERMEDIATE COURSE

FROM	TO	AREA SQ. YD.	TYPICAL WIDTH	407* TACK @.08 GAL./S.Y. GALS.	407** TACK @.05 GAL./S.Y. GALS.	ITEM 254 PAVEMENT PLANING, A.P.P. THICKNESS	ITEM 254 S.Y.	ITEM 441 ASPHALT CONCRETE INTERMEDIATE COURSE TYPE 1, (449) THICKNESS	ITEM 441 TONS	ITEM 441 ASPHALT CONCRETE INTERMEDIATE COURSE TYPE 2, (449) THICKNESS	ITEM 441 TONS	ITEM 441 ASPHALT CONCRETE SURFACE COURSE TYPE 1, (449) PG64-22 THICKNESS	ITEM 441 TONS	ITEM 614 WORK ZONE CENTER LINES CLASS II MILES	ITEM 614 WORK ZONE LANE LINES CLASS II MILES	ITEM 617 COMPACTED AGGREGATE AS PER PLAN TONS
PARKING LOT AREA		1,575	45'	130	80			0-0.75"	70			1.25"	110			10
Allowance for driveways, intersections, width variations, etc.				10	5		–		5				10			5
			TOTAL	140	85		–		75				120			15

D-4 BALLVILLE - CHUDZINSKI PARK PARKING LOT

NOTE: A CONTINGENCY AMOUNT OF ITEM 253 – PAVEMENT REPAIR HAS BEEN SET UP FOR THIS PROJECT. FOR A DESCRIPTION, PLEASE REFER TO THE SUPPLEMENTAL SPECIFICATIONS.
(500 S.Y. +/–)

RD. NO. T.R. 224 Clapp Rd.	
BY NDM	DATE FEB. 2023

GREEN CREEK TWP.

NO SCALE

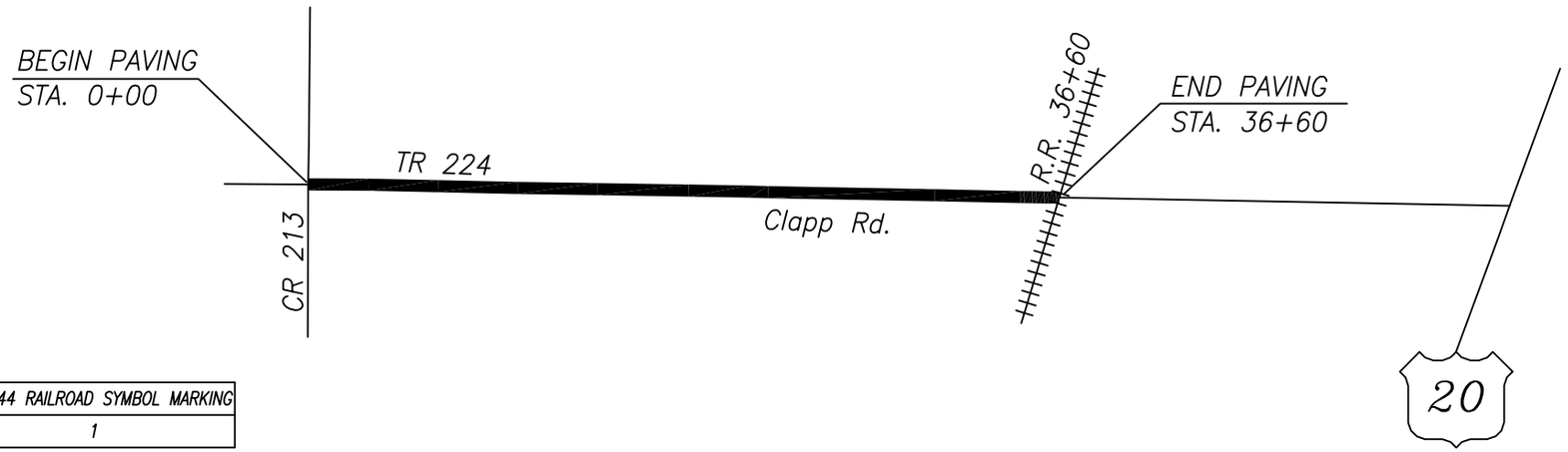

ITEM 644 RAILROAD SYMBOL MARKING
1

ITEM 642 TRAFFIC PAINT		
ROAD MILES	EDGE LINE TYPE 1 MILES	CENTERLINE TYPE 1 MILES
0.69	–	0.69

*APPLICATION ON EXISTING PAVEMENT (OR MILLED SURFACE)
**APPLICATION ON INTERMEDIATE COURSE

NOTE: PAVE ROAD FULL WIDTH (SEE SUPPLEMENTAL SPECIFICATIONS)

FROM	TO	LENGTH LIN. FT.	TYPICAL WIDTH	407* TACK @.08 GAL./S.Y. GALS.	407** TACK @.05 GAL./S.Y. GALS.	ITEM 254 PAVEMENT PLANING, A.P.P. THICKNESS	ITEM 254 S.Y.	ITEM 441 ASPHALT CONCRETE INTERMEDIATE COURSE TYPE 1, (449) THICKNESS	ITEM 441 TONS	ITEM 441 ASPHALT CONCRETE INTERMEDIATE COURSE TYPE 2, (449) THICKNESS	ITEM 441 TONS	ITEM 441 ASPHALT CONCRETE SURFACE COURSE TYPE 1, (449) PG64-22 THICKNESS	ITEM 441 TONS	ITEM 614 WORK ZONE CENTER LINES CLASS II MILES	ITEM 614 WORK ZONE LANE LINES CLASS II MILES	ITEM 617 COMPACTED AGGREGATE AS PER PLAN TONS
0+00	36+60	3,660	18.5'	605	380			0–0.75"	315			1.25"	525	0.69		230
Allowance for driveways, intersections, width variations, etc.				35	20		100		20				30			15
			TOTAL	645	400		100		335				555	0.69		245

D–5

GREEN CREEK – T.R. 224 (CLAPP RD.)

SANDUSKY COUNTY

SUPPLEMENTAL SPECIFICATIONS

FOR

ASPHALT CONCRETE

COMPLETION DATE

Complete all work by September 30, 2023.

GENERAL

The requirements of Items 401, 402, 403, 440, 441 and 449 of the 2023 Edition of the State of Ohio, Department of Transportation, Construction and Materials Specifications (ODOT C & MS) apply, except as modified by these Supplemental Specifications.

The functions of the "Monitoring Team" will be performed by the Sandusky County Engineer or a designated representative.

The Contractor shall contact the Sandusky County Engineers Office 48 hours in advance of starting any work to allow for scheduling of bridge deck water proofing or other necessary work.

JOB MIX FORMULA (JMF)

The JMF may be developed specifically for this project and approved by ODOT or may be one previously approved by ODOT. ODOT approved JMF must be accompanied with a copy of the ODOT approval letter.

Use PG64-22 asphalt binder.

ASPHALT CONCRETE MIXING PLANT

Submit a copy of ODOT approval letter of plant calibration at least one (1) week prior to the beginning of production to the County Engineer.

METHOD OF PAYMENT

Asphalt Concrete and Compacted Aggregate will be bid and paid for on a tonnage basis. All tonnage, in excess of the contract amount, will be at the Contractor's expense, unless otherwise authorized by the Engineer.

PRICE ADJUSTMENTS

Price adjustments will not be made for asphalt binder, fuel or steel price fluctuations.

GENERAL CONSTRUCTION PROCEDURES

1. The planing depth shall match the combined thicknesses of the proposed intermediate and surface courses of asphalt concrete. The finished cross-slope of the planed surface and the finished asphalt concrete surface shall be the same, typically 3/16" per foot.

2. Paving is to be a continuous operation. Regulate the speed of the paver to eliminate stops between loads.

3. Do not place asphalt concrete when the air temperature is less than sixty (60) degrees F° unless waived by the Sandusky County representative on site.

4. Do not place asphalt concrete on wet surfaces. In the event of rain during the paving operation, only those trucks in route immediately after the rain has started will be permitted to unload.

5. Do not permit traffic on asphalt concrete until it has cured sufficiently so no marking will appear.

6. Contractor shall use a string line to establish a straight edge. String line shall be placed on outside edge of pavement, unless otherwise authorized by the Engineer.

7. Transverse joints shall be minimized or avoided all together. Locations of transverse joints shall be subject to the Engineer's approval.

8. In areas where the surface is required to be feathered to meet an adjoining surface, coat the existing surface uniformly with a thin coat of asphalt binder. The Contractor may choose to mill a butt joint instead. There shall be no additional cost for this work.

9. Place surface course within seven (7) days of intermediate course.

FEATHER JOINT DETAIL

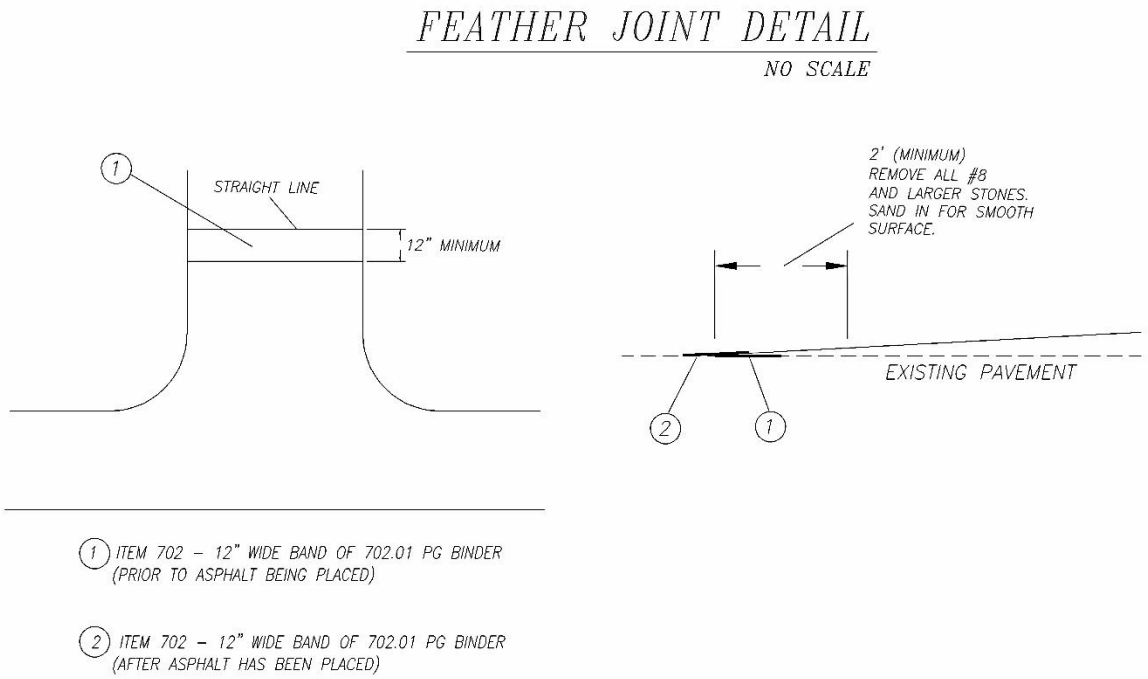

DRIVEWAYS & MAILBOX APPROACHES

Do not use private driveways to turn around.

Extend asphalt concrete into all driveways and mailbox approaches a minimum of four (4) feet or as directed by the Engineer.

Place Item 617 Compacted Aggregate in driveways with excessive drop offs prior to the conclusion of each day's work as directed by the Engineer.

ITEM 253 – PAVEMENT REPAIR

An estimated quantity of Item 253 Pavement Repair has been included in the plan to be used as a contingency as directed by the Engineer. The work shall include removal and replacement of the asphalt material at the designated repair areas. Contractor shall replace deteriorated pavement with Item 301 Asphalt Concrete Base. Depth of repair shall be a minimum of 6 inches. Length and width of repairs shall be as directed by the Engineer. Minimum width of repairs shall be 4 feet.

PAVEMENT MARKING

This work shall conform to the 2023 ODOT Construction Materials Specifications, Item 640, "Pavement Marking" and Item 642, "Traffic Paint" except as modified below.

A. Paint Specifications
The center line and edge line shall conform to Item 740.02, "Traffic Paint" in the 2023 Construction and Materials Specifications and contain code number listed on the Office of Materials Management approved list.

B. The county will provide the required "T" marking.

C. Paint Striping shall only be performed when both the pavement surface and the air temperature are above the following respective temperature.

Traffic Paint: 50º F

D. The protection of the painted lines shall be the responsibility of the Contractor. The Contractor shall repaint, at his own expense, any lines tracked through by the traveling Public. Payment for this "protection" will be made under Item 614: Lump Sum; Maintaining Traffic.

MAINTAINING TRAFFIC

Maintain traffic at all times, except on roads designated for full width paving.

Erect and maintain all necessary signs and traffic control devices in conformance with Item 614, Maintaining Traffic and the Ohio Manual of Uniform Traffic Control Devices.

Always give emergency vehicles access.

Payment for all involved costs will be made in the Lump Sum bid Item 614 Maintaining Traffic.

LOAD LIMITS

Paint the Gross Vehicle Weight (in pounds) in an obvious location on the side of any vehicle used to haul material to this project. Do not exceed this amount.

If a vehicle exceeds this amount, liquidated damages per the following schedule will be deducted from money due the Contractor:

Overload	Liquidated Damages
Less than 2,000 lb.	$80.00
2,000 to 5,000 lb.	$100.00 plus $1.00 per 100 lb. of total overload
5,000 to 10,000 lb.	$130.00 plus $2.00 per 100 lb. of total overload
Over 10,000	$160.00 plus $3.00 per 100 lb. of total overload

GUARANTEE

Guarantee for a period of one year from the date of completion of the work that it is free from all defects due to faulty materials and workmanship. Promptly make corrections as may be necessary by the reason of such defects. The Engineer will give notice of observed defects with reasonable promptness. If repairs, adjustments or other work which may be necessary by such defects are not made, the Engineer may do so and charge the Contractor the cost thereby incurred. The Contract bond is required to be in full force and effect through the guarantee period.